SCHEMATIC DIAGRAMS

MOD.

WIZARD 325

ELECTRONIC ORGAN

325

Gem

GEM A PRODUCT OF general electro music

MONDAINO · FO · ITALY

INDEX

PAGE	D.W.G.	DESCRIPTION	P.C. BOARD	PART CODE
3	SO 1322	BLOCK DIAGRAM		
4	SO 1323	MASTER FREQUENCY GENERATOR	24.453	74.255
		FREQUENCY DIVIDERS	24.450	74.016
5	SO 1330	PEDAL BOARD & GENERATOR	24.444	76.212
6	SO 1324	PULSE SHAPER	24.462	76.211
		KEY DETECTOR SWITCHBOARD	24.485	81.023
		U.M. OR L.M. SWITCHBOARD	24.486	81.024
7	SO 1326	PIANO & ORCHESTRAL VOICING	24.462	76.211
8	SO 1325	SOLO VOICING	24.462	76.211
		REVERB	24.133 (1352)	76.055
9	SO 1327	ACCOMPANIMENT VOICING	24.462	76.211
		PEDAL VOICING	24.462	76.211
		CONTROL BOARD	24.488	76.213
		MIXER	24.462	76.211
10	SO 1328	LITTLE BAND CHEEK BLOCK	24.458	75.061
		RHYTHM GENERATOR	24.361	75.059
11	SO 1329	CHORD GENERATOR		75.058
		mother board	24.382	75.050
		walking bass modulator mdl	24.378	75.046
		alternate bass modulator mdl	24.388	75.051
		alternate bass generator mdl	24.380	75.047
		AUXILIARY SWITCH BOARD	24.456	81.483
12	SO 1331	POWER SUPPLY (220/240 V~ vers)		73.550
		fuse board	24.381	76.129
		rectifiers	24.376	76.128
		POWER SUPPLY (125 Vac vers)		73.551
		VOLTAGE REGULATOR	24.386	73.542
		POWER AMPLIFIER		73.010
		board	24.375	76.127
		SWELL PEDAL		79.004

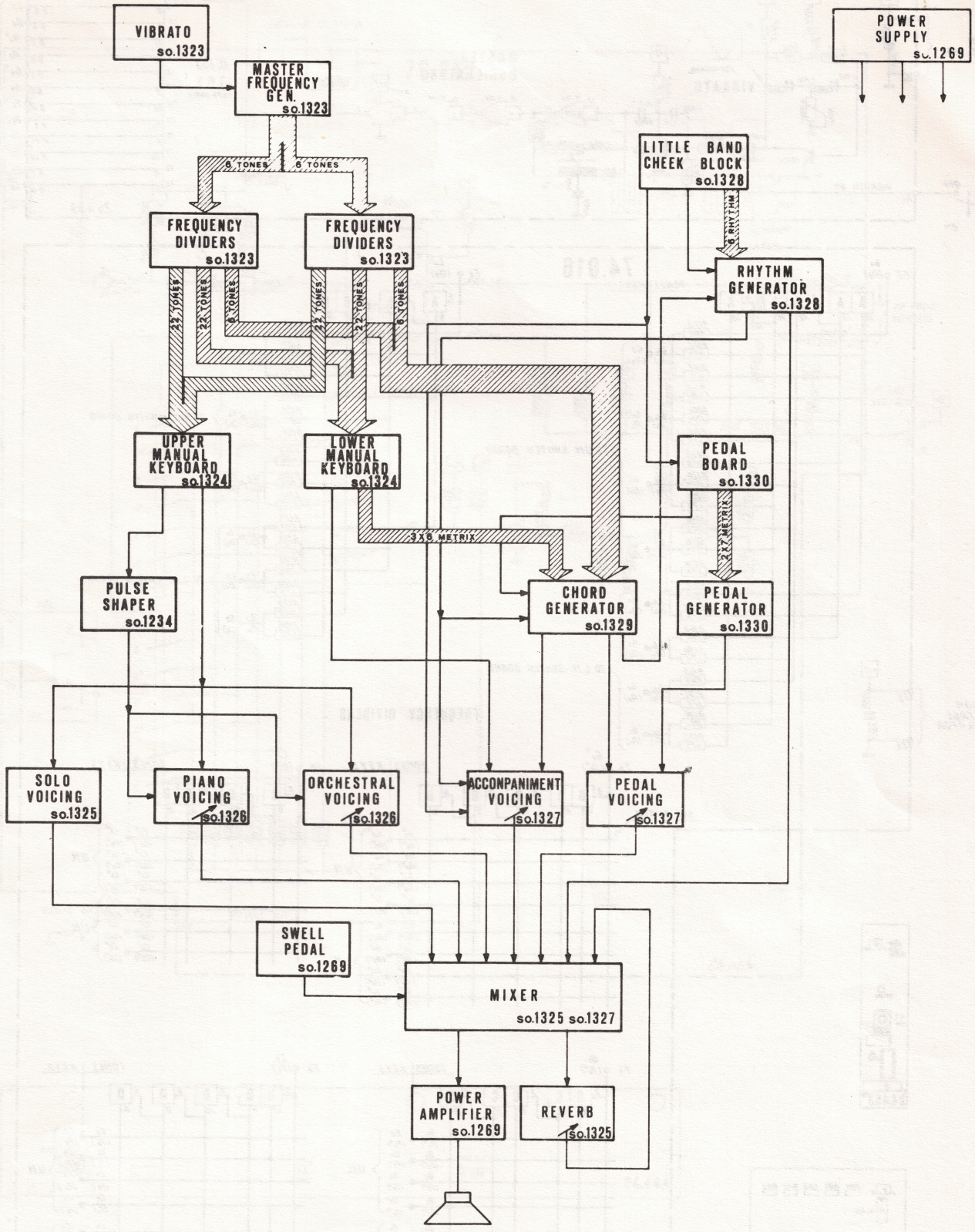

REV	SUBJECT	DATE	CKD
ISSUED	DATE	BY	USED ON:
DRAWN			
CKD			
APPRVD			

DDR MONDAINO (FO)

N. SO 1322

REPLACED BY

REPLACING

SCHEMATIC DIAGRAM:
BLOCK DIAGRAM

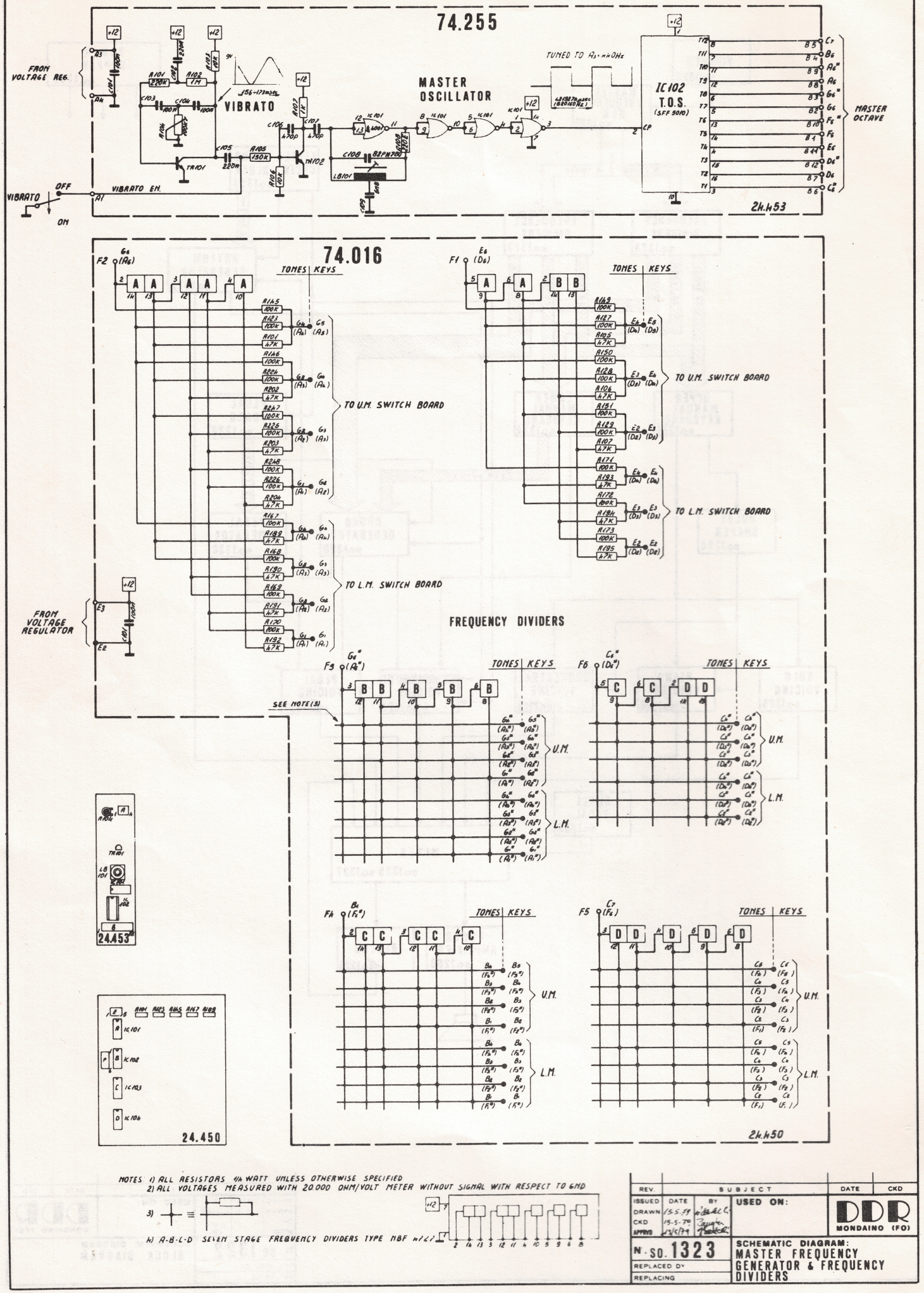

NOTES: 1) ALL RESISTORS 1/4 WATT UNLESS OTHERWISE SPECIFIED
2) ALL VOLTAGES MEASURED WITH 20.000 OHM/VOLT METER WITHOUT SIGNAL WITH RESPECT TO GND

3) ≡

4) A-B-C-D SEVEN STAGE FREQUENCY DIVIDERS TYPE MBF 4727

REV.	SUBJECT	DATE	CKD
ISSUED	DATE 15.5.79 BY	USED ON:	
DRAWN	15.5.79		
CKD	15.5.79		
APPRD	24/5/79		

DDR MONDAINO (FO)

N. SO. 1323

REPLACED BY

REPLACING

SCHEMATIC DIAGRAM: MASTER FREQUENCY GENERATOR & FREQUENCY DIVIDERS

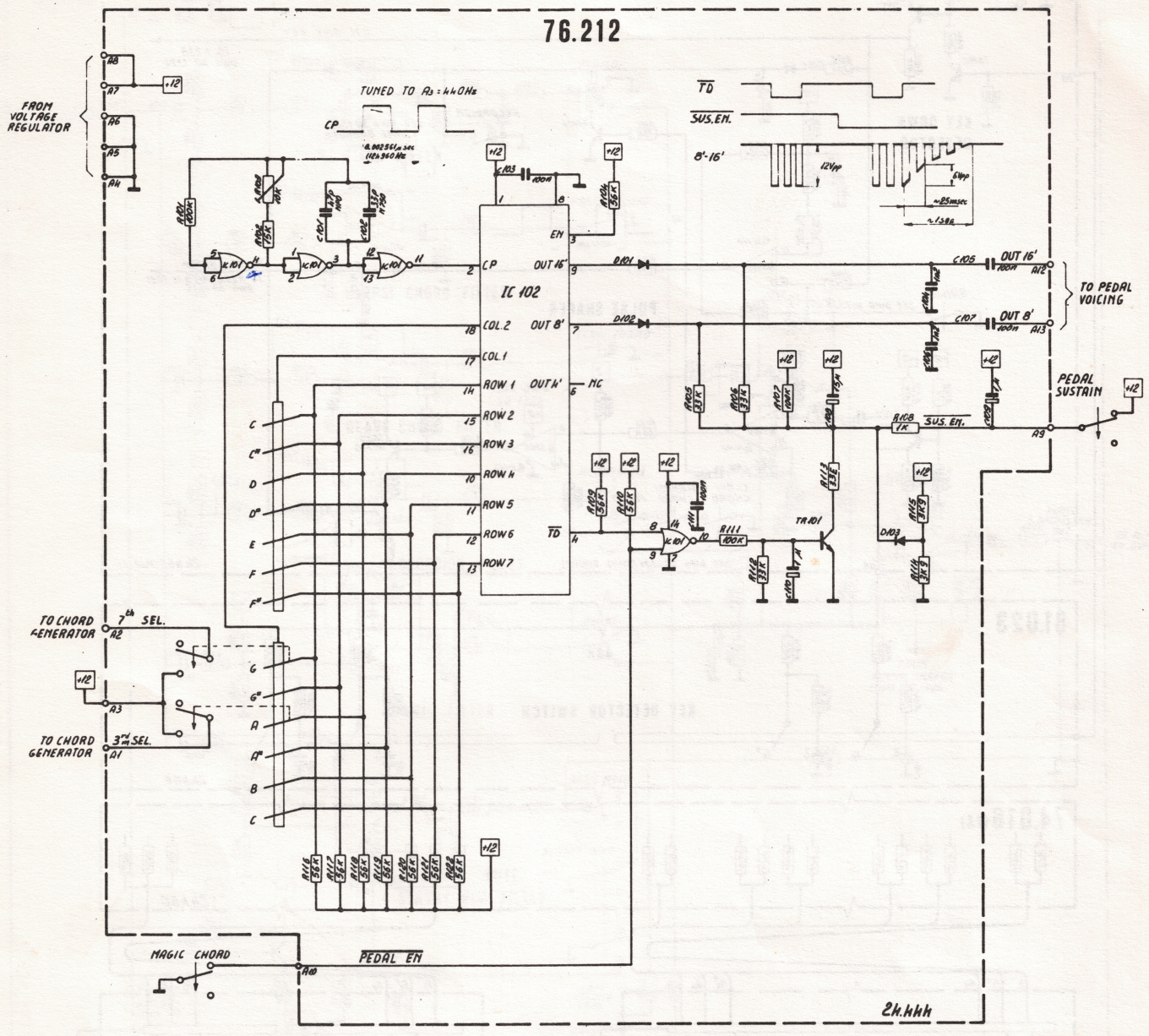

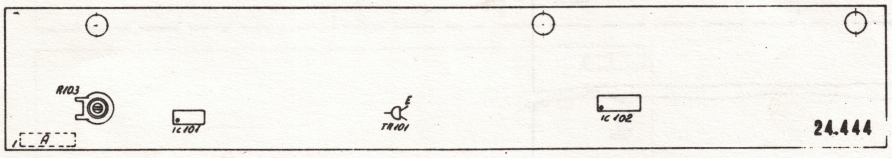

NOTES 1) ALL RESISTORS 1/4 WATT UNLESS OTHERWISE SPECIFIED
2) ALL DIODES FDH 999 UNLESS OTHERWISE SPECIFIED
3) IC 101 : QUAD 2 INPUT NOR CMOS GATE, 4001
4) IC 102 : CUSTOM DEVICE

REV.	SUBJECT	DATE	CKD
ISSUED	DATE 11-5-79 BY	USED ON:	
DRAWN			
CKD	14.5.79		
APPRVD			

DDR MONDAINO (FO)

N°. SO 1330

REPLACED BY

REPLACING

SCHEMATIC DIAGRAM:
PEDAL BOARD
PEDAL GENERATOR

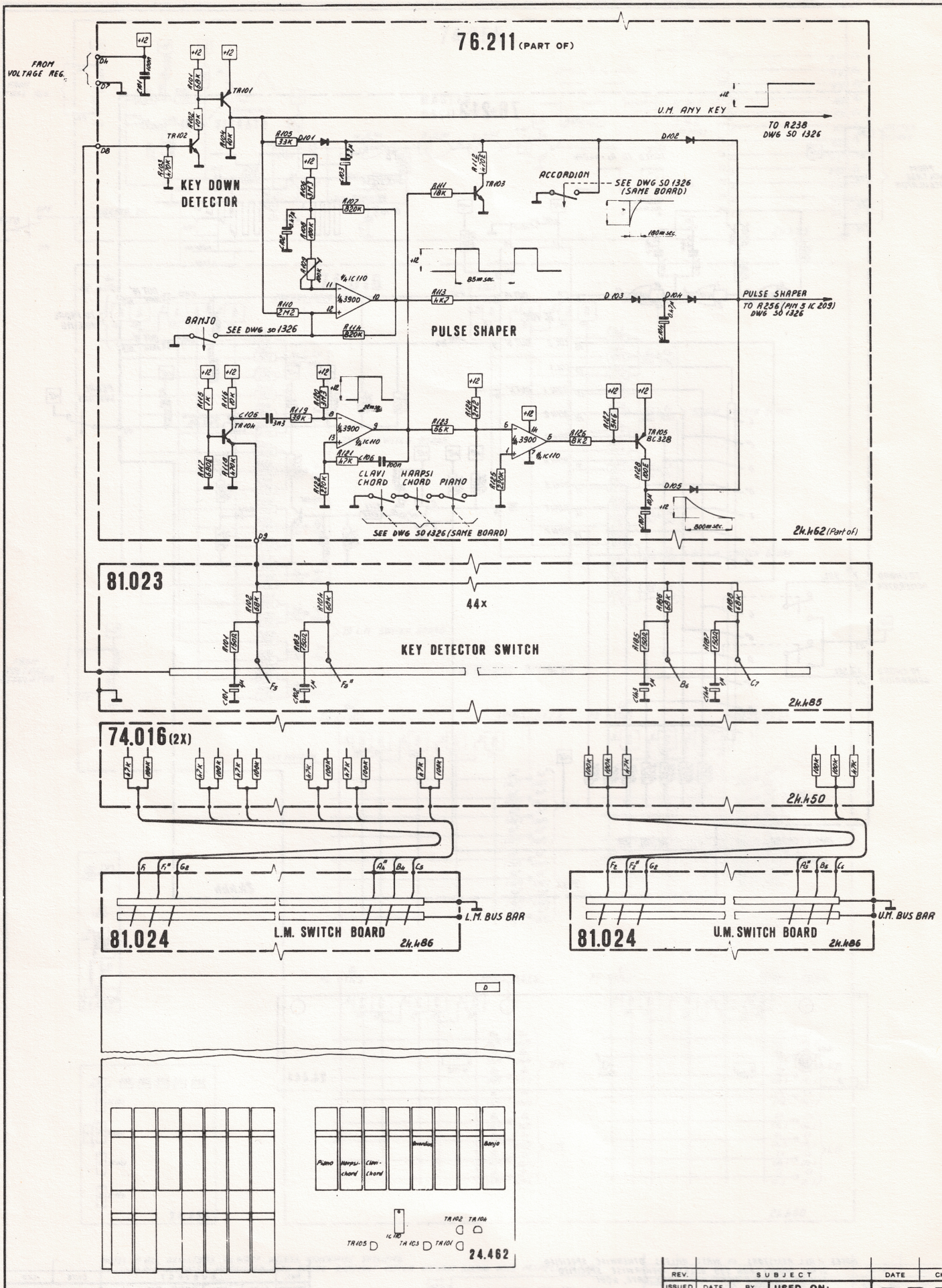

NOTES 1) ALL RESISTORS ¼ WATT UNLESS OTHERWISE SPECIFIED
2) ALL DIODES ARE FDH 999 UNLESS OTHERWISE SPECIFIED

REV.	SUBJECT	DATE	CKD
ISSUED	DATE	BY	USED ON:
DRAWN	4/5/79		
CKD	24/5/79		
APPRVD	24.5.79		

DDR MONDAINO (FO)

N° SO 1324

REPLACED BY

REPLACING

SCHEMATIC DIAGRAM:
PULSE SHAPER
UM & LM KEYBOARDS

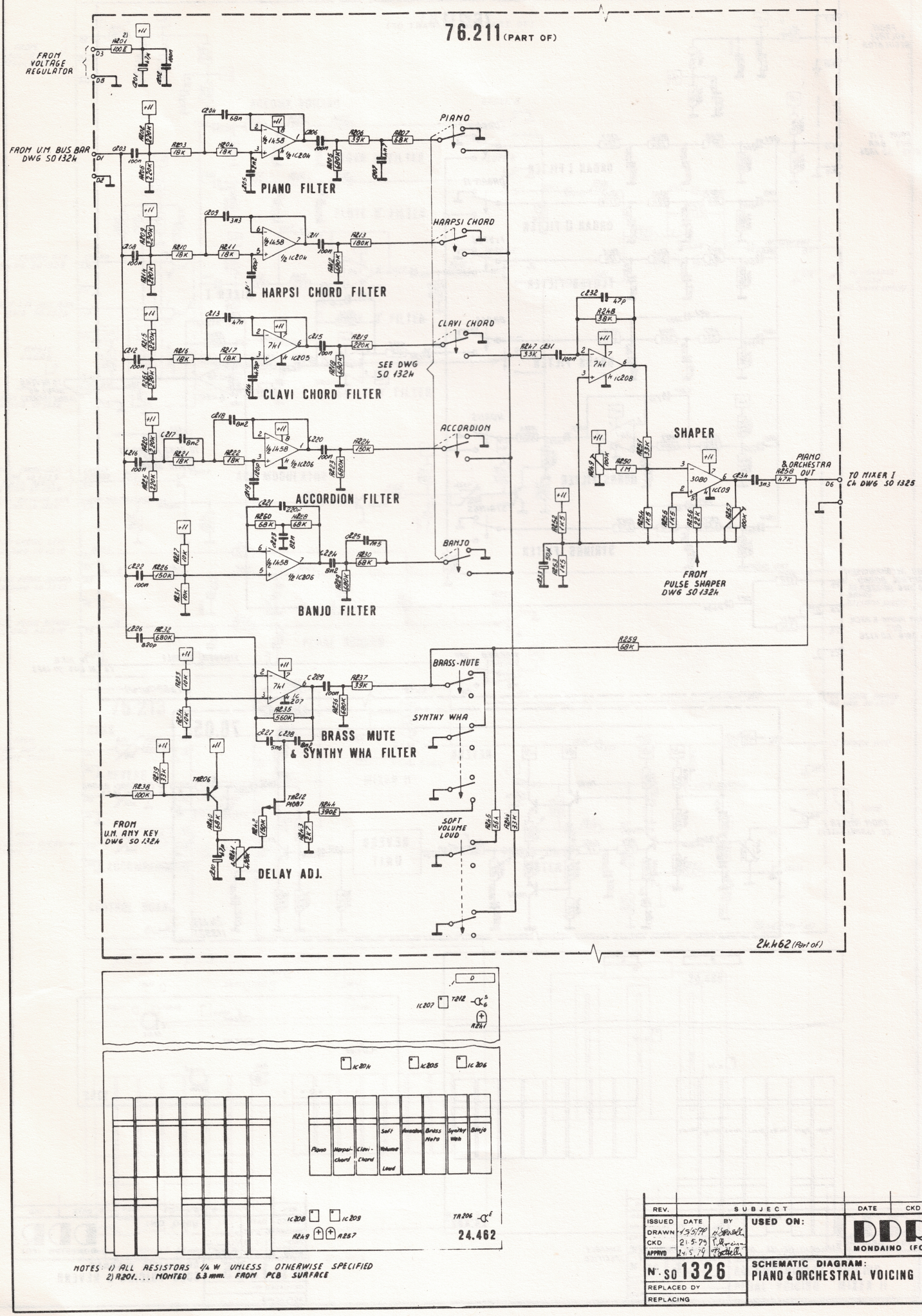

NOTES: 1) ALL RESISTORS 1/4 W UNLESS OTHERWISE SPECIFIED
2) R201.... MONTED 6.3 mm. FROM PCB SURFACE

REV.	SUBJECT	DATE	CKD
ISSUED	DATE 15.5.79 BY	USED ON:	
DRAWN	21.5.79		
CKD	24.5.79		
APPRVD			
N°. SO 1326		SCHEMATIC DIAGRAM: PIANO & ORCHESTRAL VOICING	
REPLACED BY			
REPLACING			

DDR MONDAINO (FO)

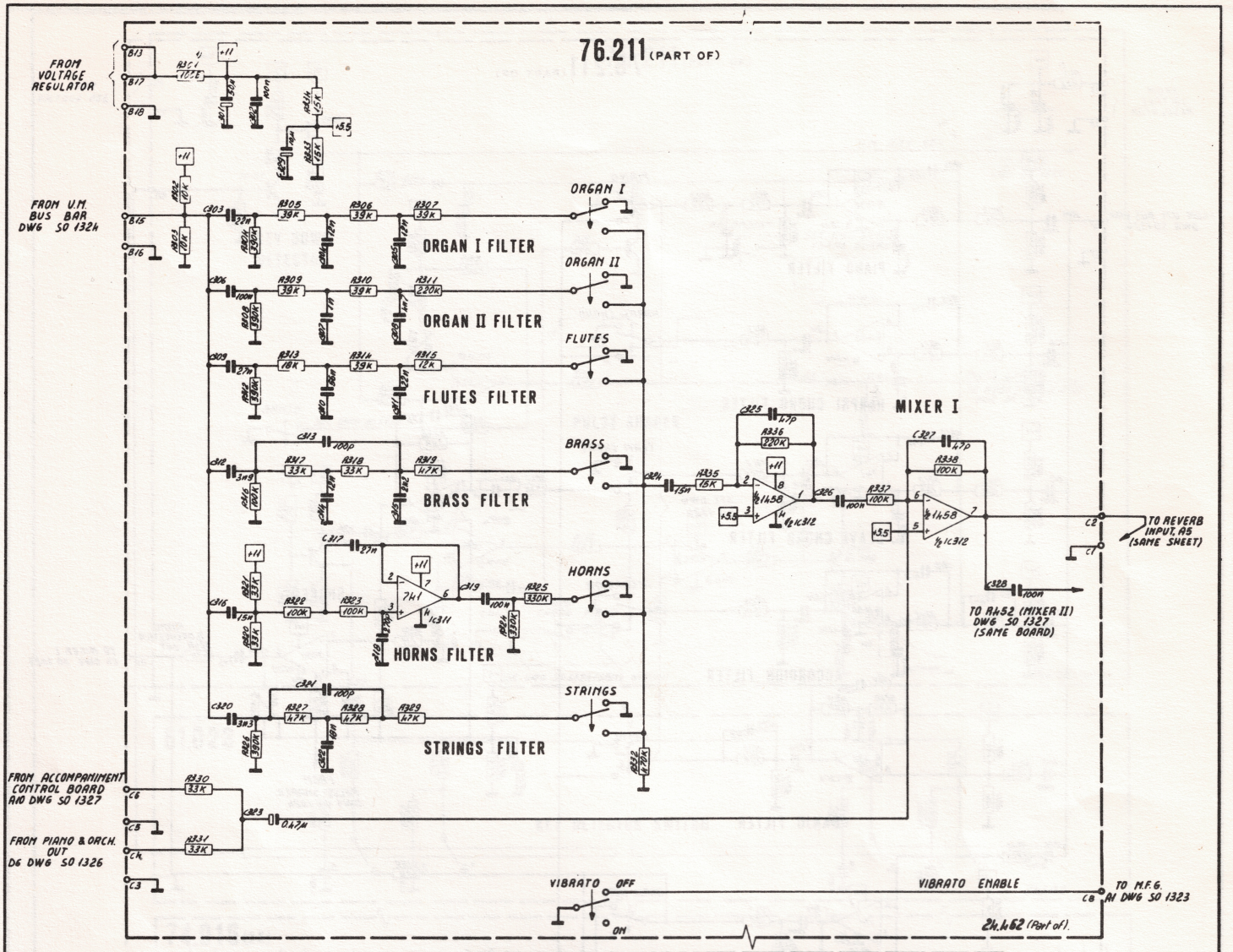

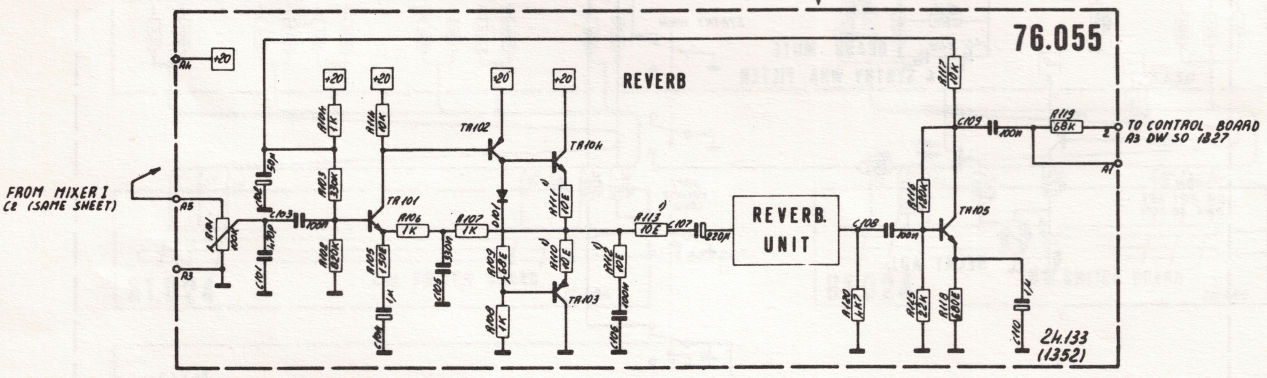

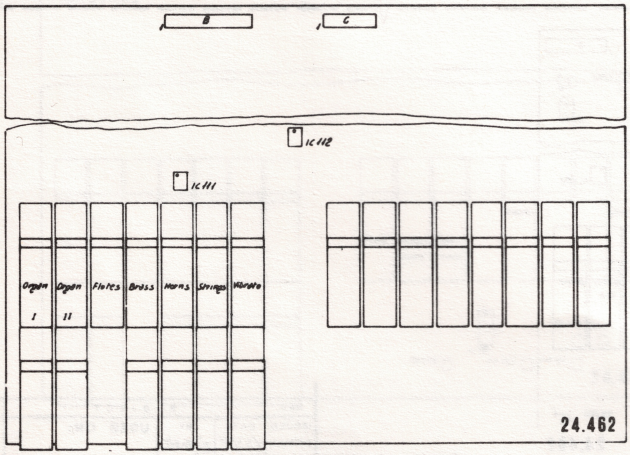

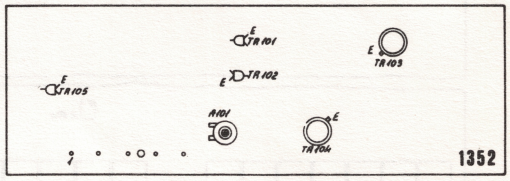

NOTES: 1) R301-110-111-112-113 MOUNTED 6.3mm. FROM PCB SURFACE
2) ALL RESISTORS 1/4 WATT UNLESS OTHERWISE SPECIFIED

REV.	SUBJECT	DATE	CKD
ISSUED	DATE	BY	USED ON:
DRAWN			
CKD	25-5-75		
APPRVD	26/5/75		
N. SO 1325			SCHEMATIC DIAGRAM: SOLO VOICING & REVERB
REPLACED BY			
REPLACING			

DDR MONDAINO (FO)

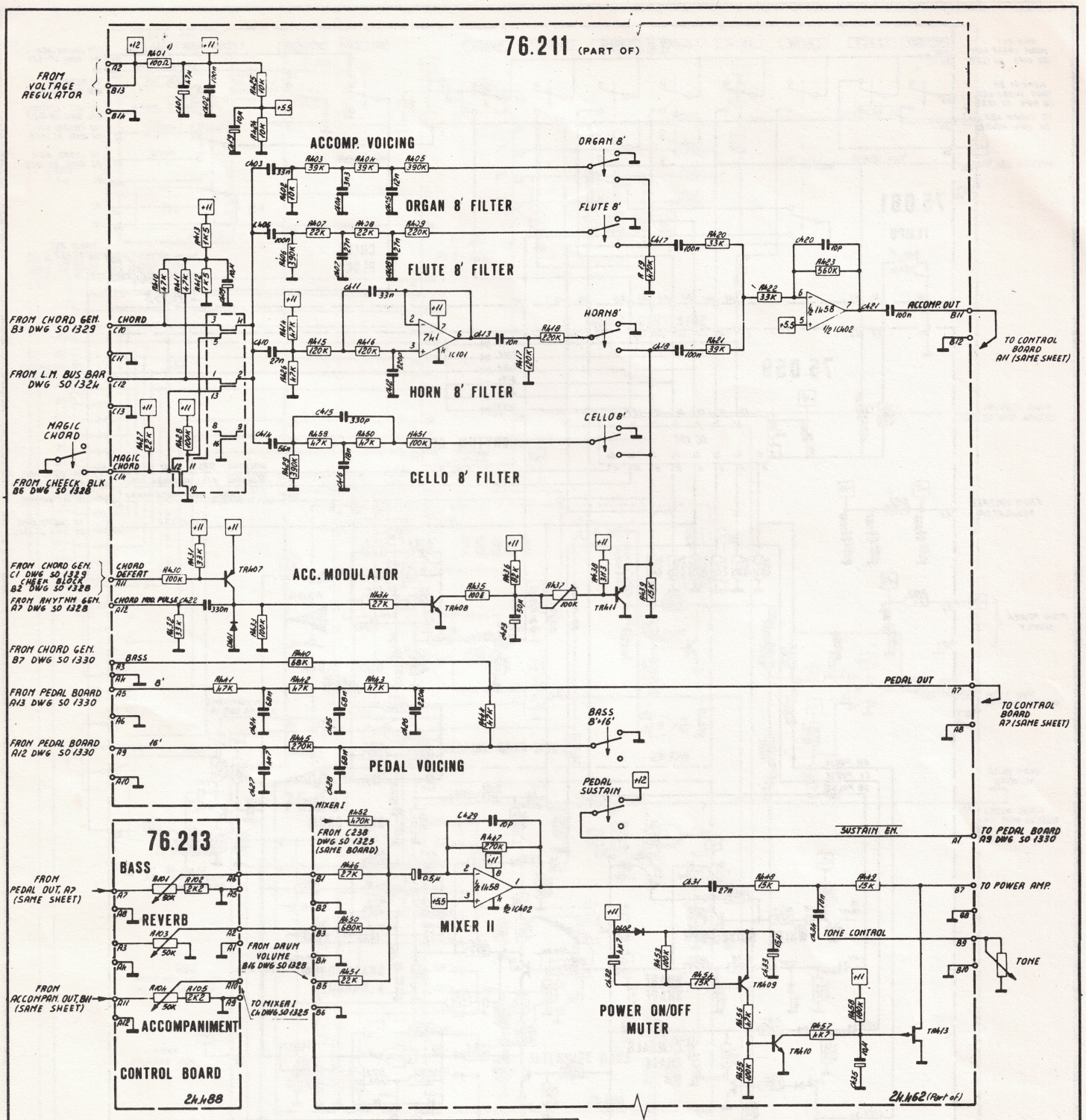

NOTES 1) RA01..... MONTED 6.3mm FROM PCB SURFACE
2) ALL RESISTORS 1/4 WATT UNLESS OTHERWISE SPECIFIED

REV.	SUBJECT	DATE	CKD
ISSUED	DATE 19.9.79 BY	USED ON:	DDR MONDAINO (FO)
DRAWN	21.5.79		
CKD	24/5/79		
APPRVD			
N° SO 1327	SCHEMATIC DIAGRAM: ACCOMPANIMENT VOICING PEDAL VOICING MIXER II		
REPLACED BY			
REPLACING			

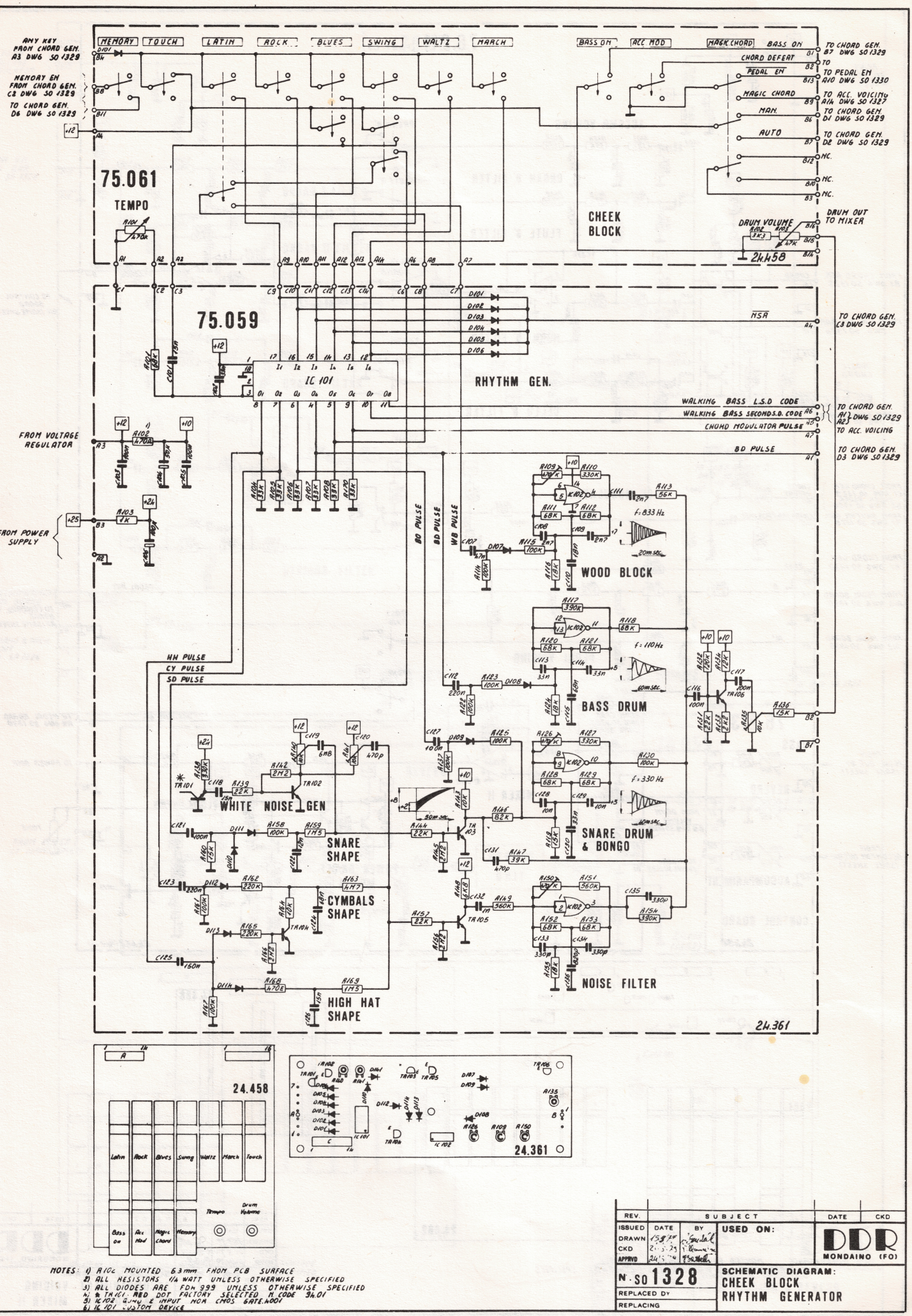

NOTES: 1) A10c MOUNTED 6.3mm FROM PCB SURFACE
2) ALL RESISTORS 1/4 WATT UNLESS OTHERWISE SPECIFIED
3) ALL DIODES ARE FDH 999 UNLESS OTHERWISE SPECIFIED
4) * TR101, RED DOT FACTORY SELECTED. N CODE 34.01
5) IC102 QUAD 2 INPUT NOR CMOS GATE. MO01
6) IC 101 CUSTOM DEVICE

REV.	SUBJECT	DATE	CKD
ISSUED	DATE	BY	USED ON:
DRAWN	15/8/79		
CKD	21/8/79		
APPRVD	24/8/79		
N° SO 1328			
REPLACED BY			
REPLACING			

DDR MONDAINO (FO)

SCHEMATIC DIAGRAM:
CHEEK BLOCK
RHYTHM GENERATOR

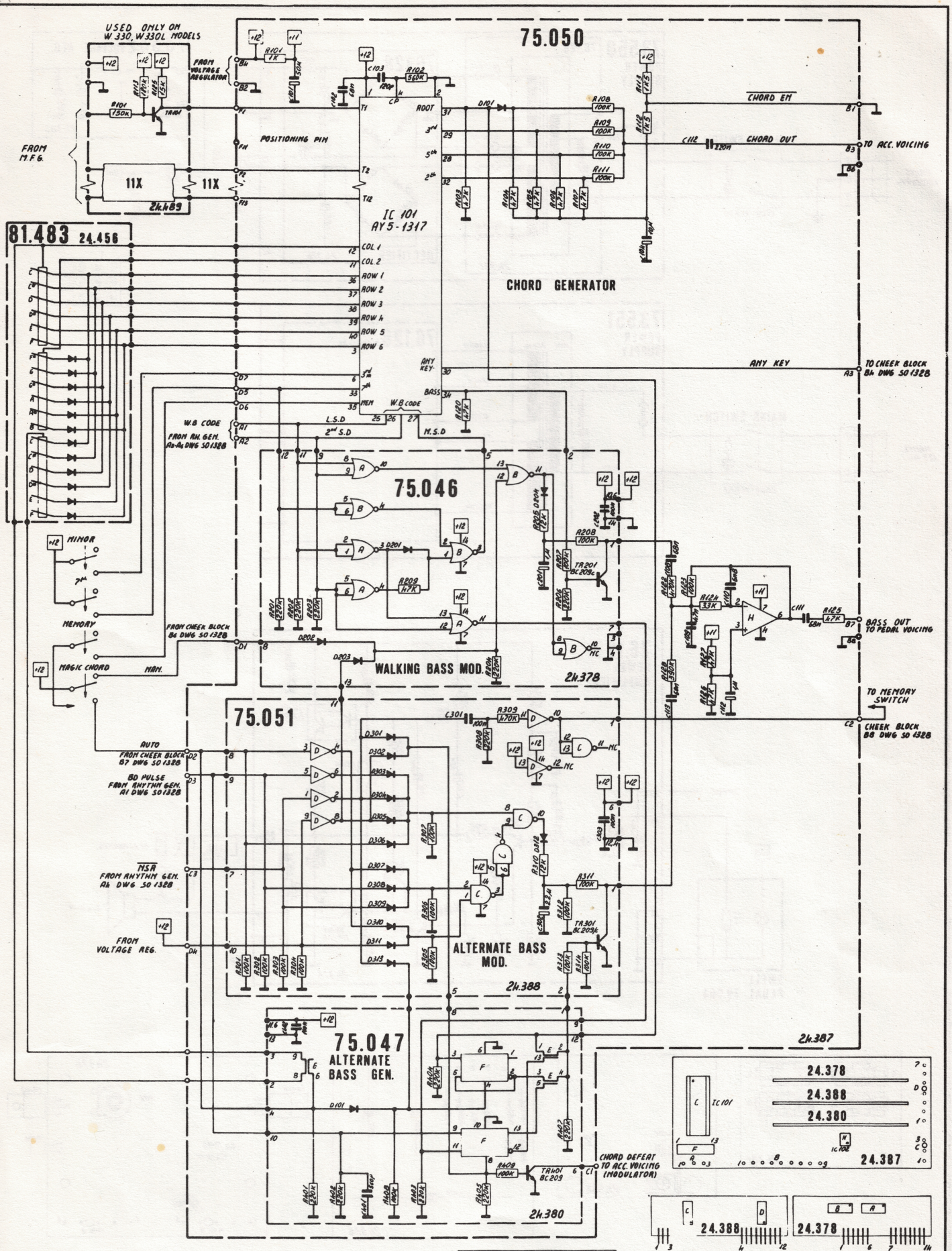

NOTES: 1) ALL RESISTORS 1/4 WATT UNLESS OTHERWISE SPECIFIED
2) ALL DIODES ARE FDH 999 UNLESS OTHERWISE SPECIFIED
3) IC A-B QUAD 2 INPUT CMOS NOR GATE - 4001
4) IC C QUAD 2 INPUT CMOS NAND GATE - 4001
5) IC D HEX INVERTER CMOS - 4069
6) IC E QUAD BILATERAL SWITCH CMOM - MC16
7) IC F DUAL FLIP-FLOP CMOS - MC13

REV.	SUBJECT	DATE	CKD
ISSUED	DATE 15/6/79 BY	USED ON:	
DRAWN	24-5-79		
CKD			
APPRVD	26/6/79		

DDR MONDAINO (FO)

N° SO 1329

SCHEMATIC DIAGRAM: CHORD GENERATOR

REPLACED BY

REPLACING

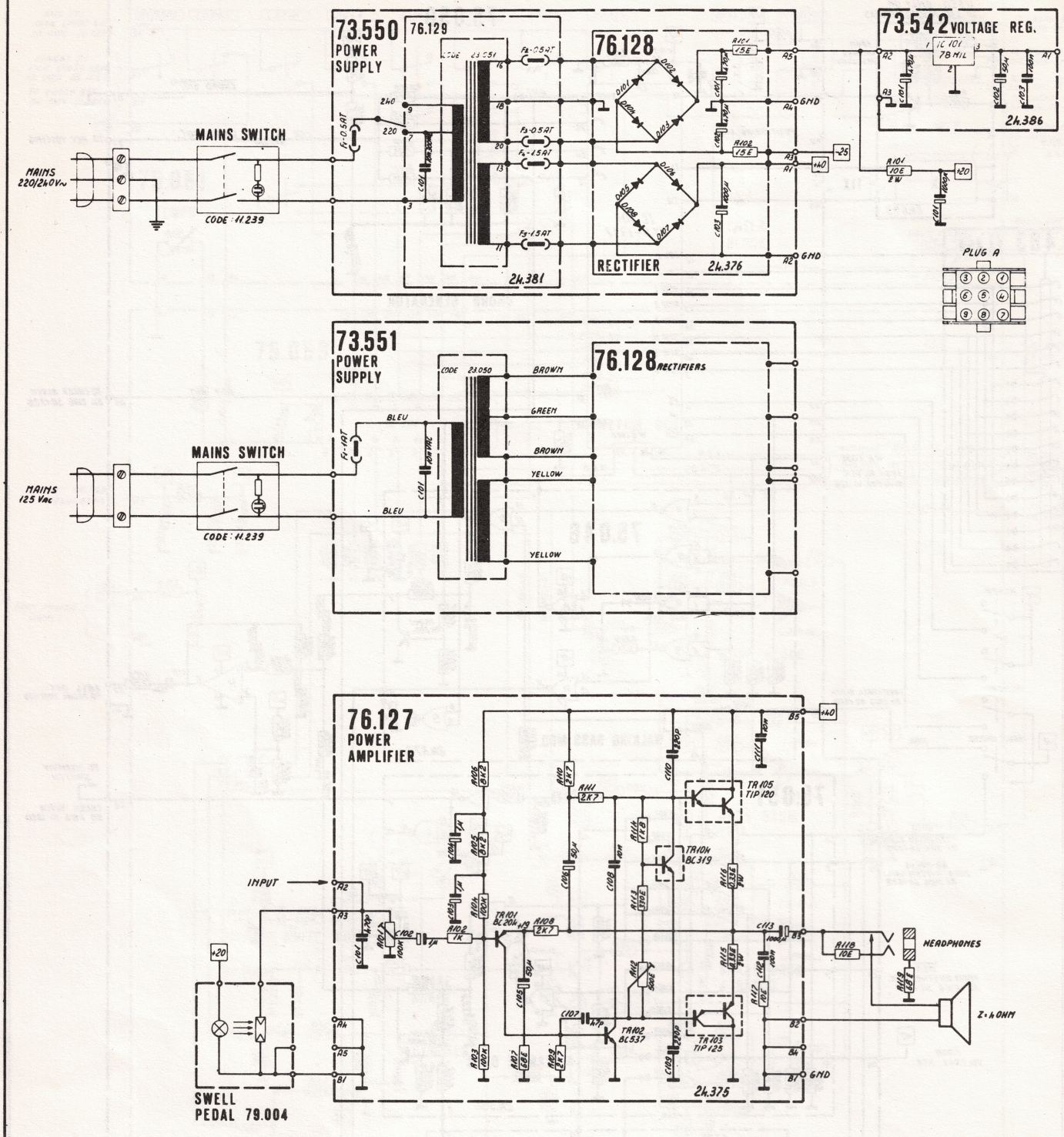

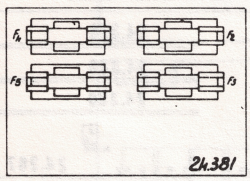

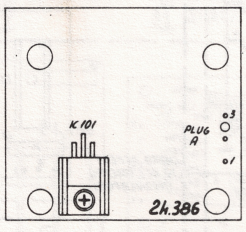

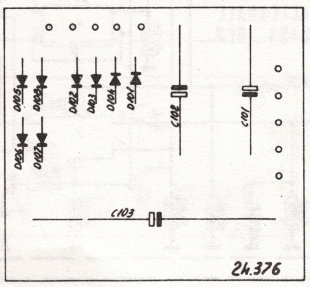

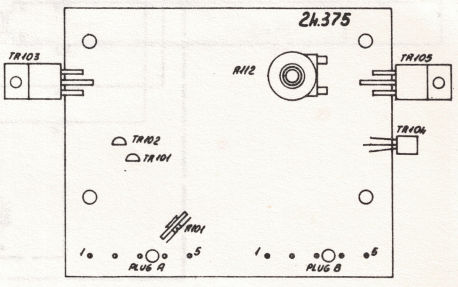

REV.	SUBJECT	DATE	CKD
ISSUED	DATE / BY	USED ON:	DDR MONDAINO (FO)
DRAWN	20/5/79		
CKD	24-5-79		
APPRVD	25/5/79		
N°. SO 1331		SCHEMATIC DIAGRAM: POWER SUPPLY VOLTAGE REGULATOR & POWER AMPLIFIER	
REPLACED BY			
REPLACING			

GEM WIZARD 3 15